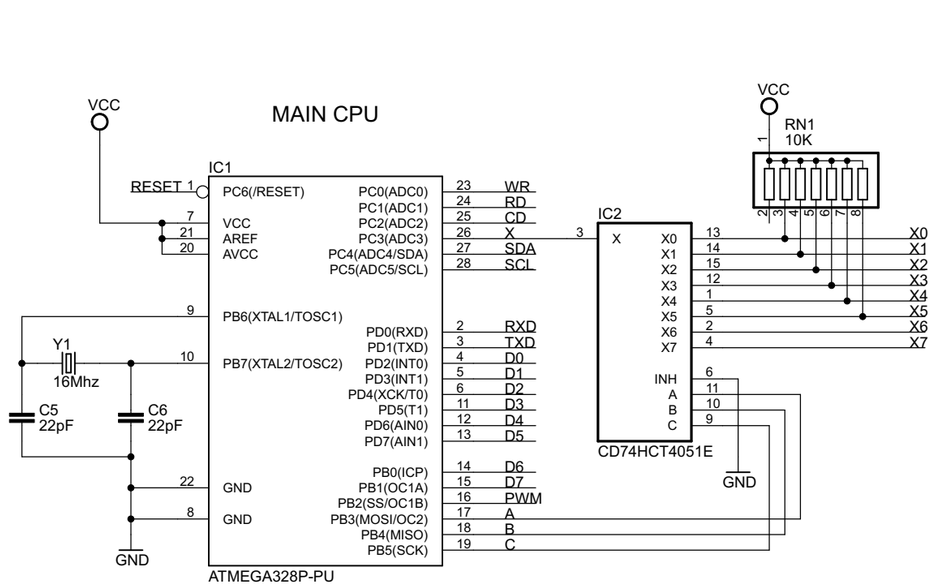


## REALTIME CLOCK

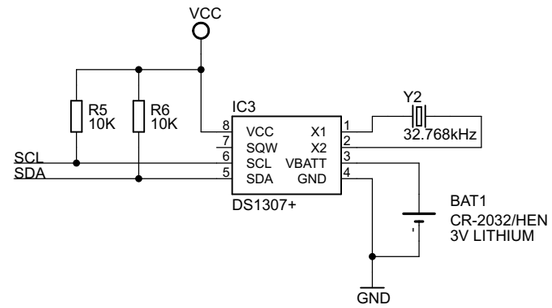


## CONNECTORS

### INPUTS

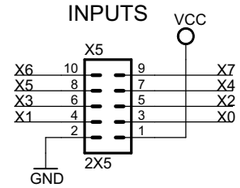


### LCD

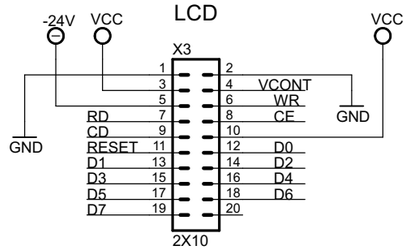


## CHIP ENABLE GENERATION

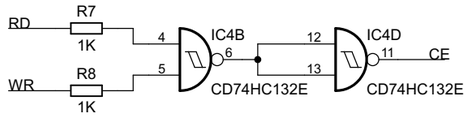


## SPARE

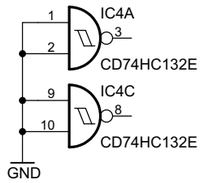


## DEBUG

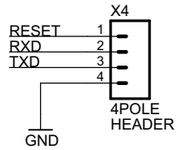


## NEGATIVE VOLTAGE CONVERTER

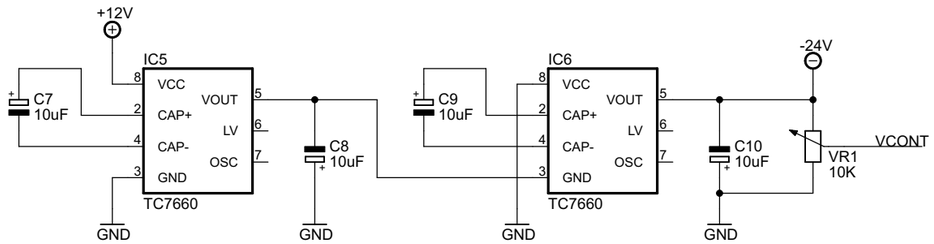


## VOLTAGE SUPERVISOR

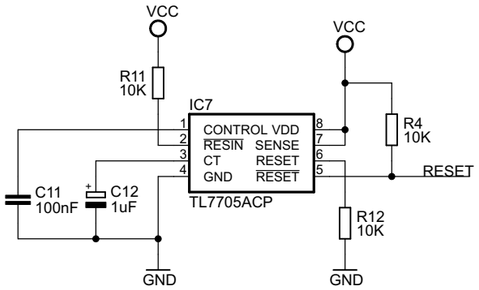


## TEMP SENSOR

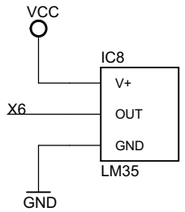


## BACKLIGHT

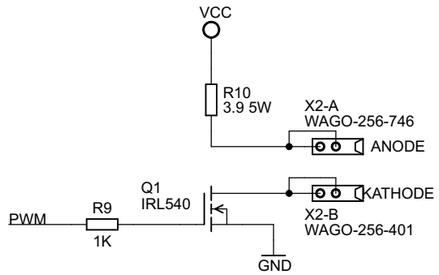


## POWER SUPPLY & BYPASS CAPS

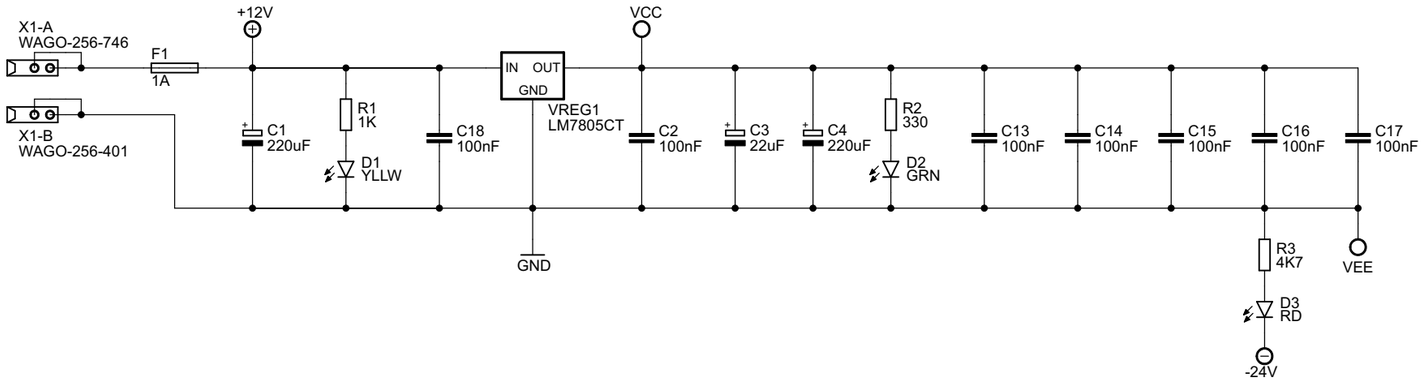


# GRAPHIC LCD CLOCK

| | |
|---|---|
| TITLE: LCD-CLOCK_REV-A | |
| Drawn by: G.A. Galenkamp | REV: A |
| Date: 6-2-2014 3:18:58 | Sheet: 1/1 |